YEOSHE

V 系列可變量軸向柱塞泵
V Series Axial Piston Pump

1.V型柱塞泵，以獨特設計斜盤變化角度功能，廣泛應用於各種場所。
特殊設計，在全壓力區內，保持低噪音性能。

2.由多種控制方式整合，能形成系統，具有省能源、小型化、低成本功能等優點。

3.功率損失小、減低油溫上升、可選配較小型油箱。

4.廣泛應用於工具機、機床、鍛壓、塑膠成形機等。

1. Combining special internal designs and strict engineering disciplines has reduced noise level to new lows in whole pressure zones.

2. Depending on variety of application needs multiple optional unique control methods are available. It does not only reduce a number of unnecessary horses, pipes and control valves but also increase efficiency and save horsepower, and cost.

3. Less capacity reservoirs can be selected and applied because of performances of low pressure loss and less heat generation.

4. Wide application ranges: it is very suitable for machine tools, plastic injection molding machines, forging machines, other industrial machines and so on.

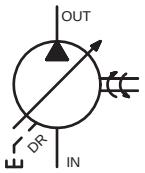

nominal pressure
常壓：175 bar
max. pressure
瞬間：280 bar

特性規格表 Specifications

尺寸 Size	型式 Model	吐出量 Displacement		Pump Delivery (7 bar) 100 PSI				壓力調整範圍 Pressure Adj Range	轉速 Speed		重量 Weight
				1500 RPM		1800 RPM					
		cm^3/rev	In^3/rev	LPM	U.S. GPM	LPM	U.S. GPM	kgf/cm^2	Max. RPM	Min. RPM	KG (LB)
1	V15	15	0.90	22.5	5.78	27.0	7.05	1: 8~70 2: 15~140 3: 20~210 4: 20~250	1800	500	13 (28.6)
	V18	17.8	1.09	26.7	7.05	32.0	8.45				13 (28.6)
2	V23	23.0	1.40	35.4	9.11	41.4	10.94				22 (48.4)
	V25	25.0	1.52	37.5	9.66	45.0	11.60				22 (48.4)
3	V38	37.8	2.31	56.7	14.98	68.0	17.96				26 (57.2)
	V42	42.0	2.56	63.0	16.23	76.0	19.58				26 (57.2)
4	V50	51.5	3.14	77.2	20.37	92.7	24.48				55 (121)
	V70	69.7	4.25	104.5	27.6	125.4	33.10				56 (123.2)

1.油泵使用安裝位置，洩油口朝上，管路背壓低於2bar單獨回油箱。
2.最高壓力使用，每一循環時間不超過6秒，液壓油清潔規範，請參見使用說明書。
3.油昇提供多聯油泵，亦可與其他型式油泵聯結，聯結方式採用標準的公制連接尺寸和SAE尺寸。

1.Installation outlet port top, the pipe bave to less than 2 bar.
2.The use of max. pressure override 6 minunt, hydraulic oil clean that see General Installation Infomation.
3.YEOSHE offer tandem pumps, and other pumps connection, the connection type use Metric version and SAE version dimensions.

Copyright@2013-YEOSHE-ALL RIGHTS RESERVED.

型號說明 Order No.

V	15	A	3	R			—						
①	②	③	④	⑤	⑥	⑦		⑧	⑨	⑩	⑪	⑫	⑬
系列 Series	規格排量 Size and Displacement	控制型式 Control Type	壓力範圍 Pressure adjusting	旋轉方向 Rotation	配管方向 Direction of pipe connections	軸心型式 Shaft type		電壓 Voltage	配管牙型 Threads type	通軸規格 Thre drive & 2nd pump	特殊規格 Design number	連接型式 Links type	設計番號 Design No.

系列 Series

① V — 高壓結構型可變排量軸向柱塞泵 Axial piston pump variable displacement high pressure version — nominal pressure 常壓：170 bar — max. pressure 瞬間：280 bar

規格排量 Size and Displacement

②

代號 Code		15	18	23	25	38	42	50	70
尺寸 Size		1		2		3		4	
排量 Displacement	cm^3/rev	15	17.8	23.0	25.0	37.8	42.0	51.5	69.7
	In^3/rev	0.90	1.09	1.40	1.52	2.31	2.56	3.14	4.25

控制方式 Control Type

③

A	壓力補償控制 Pressure compensator Control
B	無段變速，靠外接油壓缸，流量可任意變化控制 Muti-stage Flow & Singe stage Pressure Control Type (With Cylinder)
C	兩段壓力，兩段流量控制（自壓式）2-stage Pressure & Flow Control Type
CG	兩段壓力，兩段流量+遙控（自壓式）2-stage Pressure & Flow Control Type with Remote
D	低壓卸載，壓力補償控制 Solenoid Controlled Pressure Compensating Type with Unloading Device
DG	低壓卸載，壓力補償控制+遙控 Solenoid Controlled Pressure Compensating Type with Unloading Device & Remote
E	電控兩段壓力補償控制 Dual Pressure Control
EG	電控兩段壓力補償控制+遙控 Dual & Remote Pressure Control
F	電控兩段壓力，兩段流量控制 2 Flow-2Pressure Control by Solenoid Operated Valve
FG	電空兩段壓力，兩段流量控制+遙控 2 Flow-2Pressure Control by Solenoid Operated & Remote Valve
G	遠程遙控壓力補償控制 Remote Pressure Compensator Control
GJ	層式比例壓力控制 Proportional Pressure with interface
GM	層式遙控控制（不含調壓閥）Remote Interface (Not include valve)
HL□	負載感應控制 Load-sensing Compensator
HK	負載感應+比例壓力+比例流量控制 Proportional Electro-hydraulic Load sensing Type
HQ	負載感應+比例流量控制 Load-sensing Proportional Flow Control

感應壓力 Pressure

□	無記號：標準 7 KG None: Standare pressure: 7 kg	B	中壓：14 KG Middle pressure: 14 kg	C	高壓：21 KG Hige pressure: 21 kg

壓力調整範 Pressure adjusting

④

1	0.8~6.9 Mpa (8~70 kgf/cm^2)	2	1.5~13.7 Mpa (15~140 kgf/cm^2)	3	2.0~20.6 Mpa (20~210 kgf/cm^2)	4	2.0~24.5 Mpa (20~250 kgf/cm^2)

旋轉方向 Rotation

⑤

R	順時針方向 clockwise	L	逆時針方向 counter clockwise

配管方向 Direction of pipe connections

⑥

□	無記號： 兩側出油 None: side port	B	後方出油 axial port	B2	兩側出油+後方出油 4 connections for axial port

軸心型式 Shaft type

⑦

排量 Displacement	代碼 code			
V15, V18	□ 無記號：圓柱鍵型 None: Cylindric, key	S 13T 16/32 DP	S1 9T 16/32 DP	S2 11T 16/32 DP
V23, V23 V38, V42		S 13T 16/32 DP	S1 15T 16/32 DP	S3 13T 16/32 DP 加長型 Lengthening
V50, V70		S 14T 12/24 DP	S1 17T 12/24 DP	

電壓 Voltage

⑧

□ 無電壓 None	A AC100V (50/60HZ)	B AC110V (60HZ)	C AC200V (50/60HZ)
D AC220V (60HZ)	E DC 12V	F DC 24V	

配管牙型 Threads type

⑨

10	PT (RC)	40	BSPP (G)	50	NPT	60	UNF (SAE o-ring)	70	M□

通軸規格 Thre drive & 2nd pump

⑩

□ 無記號：單泵 None: Single pump	D SAE A ∅82.55	J Metric ∅100	（請參閱通軸尺寸圖）（連軸器另外訂購）
	E SAE B ∅101.6	M Vane Pump ∅95.02	

特殊規格 Design number

⑪

X	標準品 Standard	X1	低壓母機專用 Low Pressure	Z	空轉洩壓型 idling relief

連接型式 Links type

⑫

只針對 only for	V15, V18	□	無記號：標準型 None: Standard 6 bolt	A	兩孔型 SAE A 2 bolt

Copyright@2013-YEOSHE-ALL RIGHTS RESERVED.

控制方式Control Type

名稱Control Type	液壓符號JIS Symbols	性能曲綫Characteristics	特性Feature
A型式： 壓力補償控制 Pressure Compensator Control	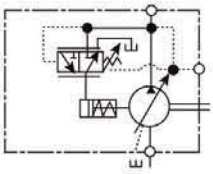	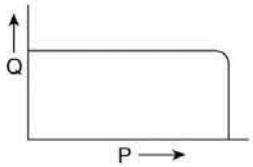	1.系統壓力增高接近調定限壓時，泵流量自動下降，壓力保持恒定。 2.流量及限壓壓力可手動調整。 1.When system pressure increase and reach preset pressure the flow decrease automatically and pressure maintain without changing. 2.Power and pressure can be adjusted manually.
B型式： 無段變速，靠外援油缸，流量可任意變化。 Multi-stage Flow & Single stage Pressure Control Type(With Cylinder)	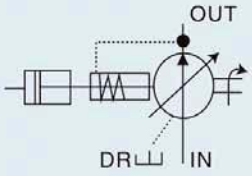	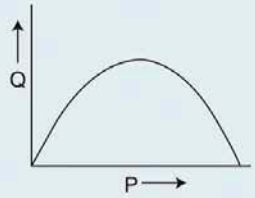	1.流量可從0調到最大，從最大調到最小，做多段變化，壓力保持設定壓。 2.使機械在上升、下降具有緩動使用，可防止衝撞、震動，適合專用機、升降起重機械。 1.Flow can be adjusted from 0 to maximum and pressure can been maintaining at preset pressure. 2.Absorbing impact and vibration which are produced by up and down motions of actuators.It is suitable for lifting equipment etc.
C型式： 單泵兩段壓力，兩流量(自壓式) 2 stage Pressure & Flow Control Type	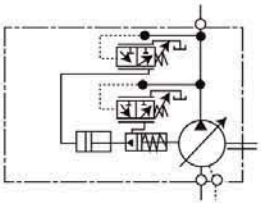	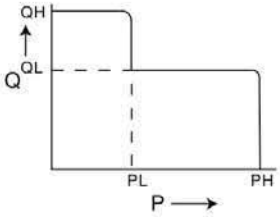	1.具低壓大流量，高壓小流量之高低壓泵功能，可選小功率之發動機。 2.系統壓力增高，接近預調的“PH”限壓時，泵的流量自動降到“QL” 3.壓力“PH，PL”及流量“QH，QL”可分別任意調整。 4.適用於空行程長，加壓行程短之機械，速度快，省馬力。 1.Low consumption electric motor can be selected to save energy because of the functions of high flow at low pressure and low flow at high pressure. 2.When pressure increase and reach preset pressure"PH",flow is reduced to"QL" 3.Pressure"PH""PL",and Flow"QH""QL"can be adjusted optionally. 4.It is applied to actuators requiring long unloaded or short loaded strokes.Speedy and horsepower efficient.
CG型式： 單泵遥控兩段壓力，兩流量(自壓式) 2 stage remote Pressure & Flow Control Type	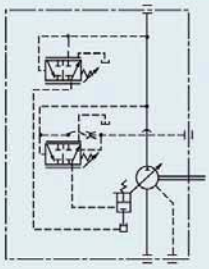	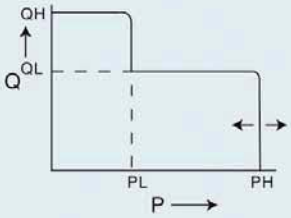	1.同單泵兩段壓力，兩流量(自壓式)“C型”。 2.可做遥控調整壓力，並由遥控閥調整壓力範圍。 3.可配合油昇比例壓力閥，達成電控比例壓力控制。 1.The same function of"C"control type. 2.The pressure and the range can be adjusted remotely by the integrated remote pressure control valve. 3.Proportional Electro-hydraulic pressure control can be applied with YEOSHE proportional valve.
D型式： 低壓卸載壓力補償控制 Solenoid Controlled Pressure Compensating Type With Unloading Device	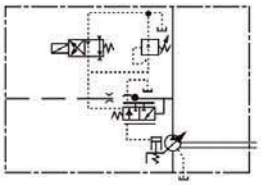	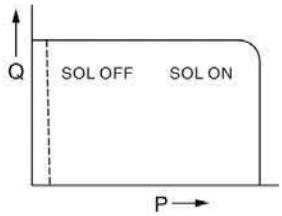	1.A型式壓力補償控制追加卸壓機能。 2.適用於卸壓時間長的情況。 3.系統停機時，通過泵的卸壓運轉，油温和噪音可保持較低水平。 1.Same as Type A and unloading function added. 2.It is applied to systems requiring long term unloading operation. 3.When solenoid is turned off,pump operation under unloading condition maintains low noise level and oil heat generation.
DG型式： 低壓卸載遥控壓力補償控制 Solenoid Controlled Pressure Compensating Type With Unloading & Remote Device	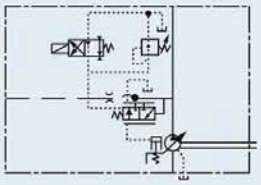	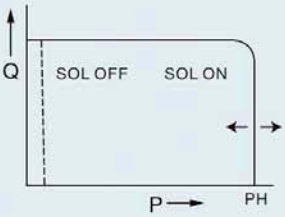	1.同單泵兩段壓力，兩流量(自壓式)“D型”。 2.可做遥控調整壓力，並由遥控閥調整壓力範圍。 3.可配合油昇比例壓力閥，達成電控比例壓力控制。 1.The same function of"C"control type. 2.The pressure and the range can be adjusted remotely by the integrated remote pressure control valve. 3.Proportional Electro-hydraulic pressure control can be applied with YEOSHE proportional valve.

Copyright@2013-YEOSHE-ALL RIGHTS RESERVED.

控制方式Control Type

名稱Control Type	液壓符號JIS Symbols	性能曲綫Characteristics	特性Feature
E型式： 電控兩段壓力補償形式 Dual Pressure Control	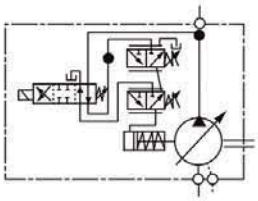	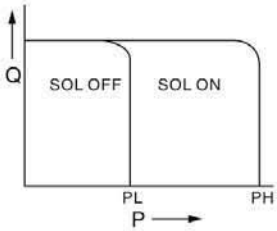	1.依電磁換向閥，控制高低兩個不同的限壓壓力。 2.適用於起動器在恒定速度下，設定兩段工作壓力時使用。 3.PL與PH閥可任選一方作爲高壓。 1.Preset high and low pressure can be controlled by switching directions of solenoid control valves. 2.This type is applied to actuators requiring 2 stage pressures with single speed. 3.One of"PL"and"PH"can be optionally be high pressure.
EG型式： 電控遥控兩段壓力補償形式 Dual & Remote Pressure Control	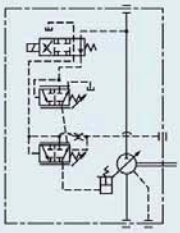	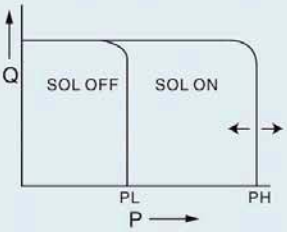	1.同電控兩段壓力補償形式“E”型。 2.可做遥控調整壓力，並由遥控閥調整壓力範圍。 3.可配合油昇比例壓力閥，達成電控比例壓力控制。 1.The same function of"E"control type. 2.The pressure and the range can be adjusted remotely by the integrated remote pressure control valve. 3.Proportional Electro-hydraulic pressure control can be applied with YEOSHE proportional valve.
F型式： 電控單泵兩段壓力，兩段流量控制 2 flow-2 pressure p.c. by solenoid operated valve	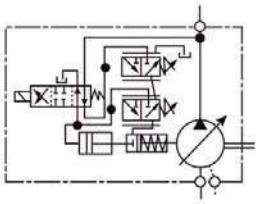	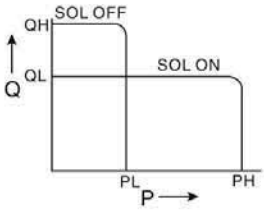	1.依電磁換向閥控制低壓大流量及高壓小流量的功能。當電磁閥通電時，壓力升高至PH，流量降至QL。 2.壓力PL，PH及流量QL，QH可任意調整。 3.適用於快速近給轉變慢速進給之機床設備等。 1.Actuators can be shifted slowly(high pressure low flow) and quickly(low pressure high flow)by switching directions of solenoid control valve.When solenoid valve turns on, pressure increase to"PH",and flow decrease to"QL". 2.Pressure"PL","PH"and flow"QL","QH"can be adjusted optionally. 3.This type is applied to actuator requiring operations of shift speed from high to low or low to high.
FG型式： 電控遥控單泵兩段壓力，兩段流量控制 2 flow-2 pressure p.c. by solenoid operated & remote value	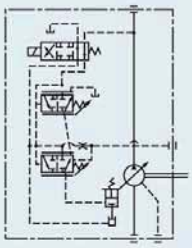	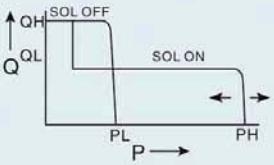	1.同電控單泵兩段壓力，兩段流量控制“F”型。 2.可做遥控調整壓力，並由遥控閥調整壓力範圍。 3.可配合油昇比例壓力閥，達成電控比例壓力控制。 1.The same function of"F"control type. 2.The pressure and the range can be adjusted remotely by the integrated remote pressrue control valve. 3.Proportional Electro-hydraulic pressure control can be applied with YEOSHE proportional valve.
G型式： 遠程壓力補償形式 Remote pressure compensator control	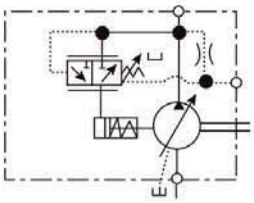	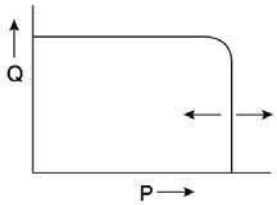	1.同壓力補償“A”形式。 2.可做遥控調整壓力，並由遥控閥調整壓力範圍。 1.The same function of"A"control type. 2.Pressure can be adjusted remotely by the integrated remote pressure control valve.
GJ型式： 疊式比例壓力控制 Proportional Pressure with interface	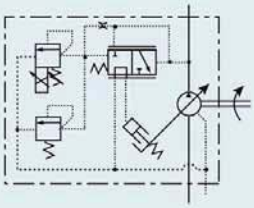	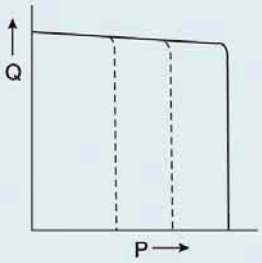	1.與GM控制相同介面與功能。 2.配裝比例壓力閥於調節閥NG6介面上，形成電控比例控制，節省能源系統。 1.Same as Type “GM” and proportional valve added. 2.The proportional valve is installed on the NG6 interface to reach Proportional Electro-hydraulic control to save energy.

Copyright@2013-YEOSHE-ALL RIGHTS RESERVED.

控制方式Control Type

名稱Control Type	液壓符號JIS Symbols	性能曲綫Characteristics	特性Feature
GM型式： 層式遥控控制 (不含調壓閥) Remote Interface (Not include pilot valve)	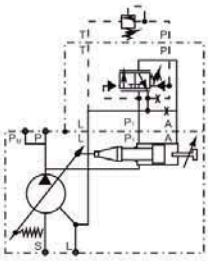	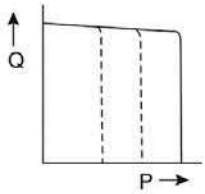	1.GM控制的調節閥上方有一個NG6的介面。可直接安裝調壓閥於介面，調節遥控閥所需壓力。亦由控制板直接設定壓力。 2.反應速度較快，提供壓力更爲穩定。 3.可採用手動或電液比例控制調節。 1.GM control with a NG6 interface, supply an installation for pilot valve to prove the operating pressure. The pressure setting can be set directly from the control panel of the machine. 2.The remote pressure compensator responds faster and offers more stable pressure. 3.The adjustment can also be manual or proportional pressure control.
HL型式： 負載感應控制 Load Sensing Compen-sator	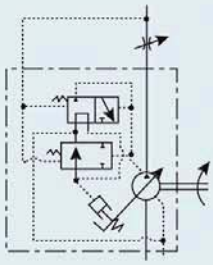	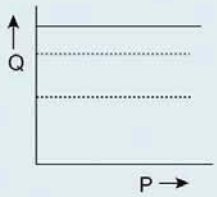	1.靠流量控制閥前後差壓一定值，控制油泵吐出量。與比例換向閥並用，能形成理想的系統省能源功能。 2.能控制負載壓力一定時，而流量依節流閥改變，油泵自動感應回饋系統吐出的恒定流量，能達到低油温省能源功能。 1.The pump outlet can be controlled by the setting pressure value of flow control valve.An ideal energy conservation system can be configurated by combining the proportional directional control. 2.When setting pressure value,flow is changed depending on throttle valve. The sensing flow feedback function can reach to low oil heat generation and saving energy.
HJ型式： 負載感應+比例壓力控制閥 Load Sensing & Proportronal Elector-hydaulic Pilot Relief Valve	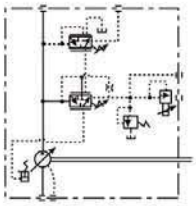	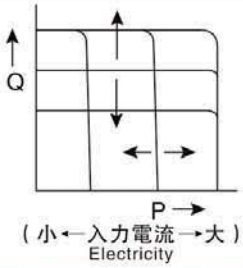	1.此爲HL形式泵浦所具備之特性外，再增加比例壓力控制。 2.裝配電磁比例壓力後，依入力電流比例控制，達到省能源、省馬力功能 1.Same as Type"HL"and proportional pressure function added. 2.Supplied with proportional electro-hydraulic pilot relief valve can reach to horse-saving and energy-saving.
HK型式： 負載感應+比例壓力+比例流量 Proportional Electro-hydrauic Load Sensing Type	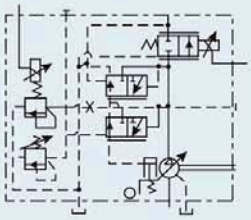	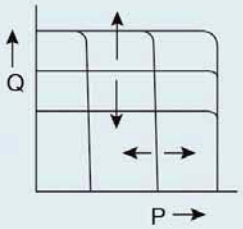	1.HK型式變量柱塞泵與比例閥構成一體，依照比例壓力、比例流量、電流大小控制，及依照負載的大小提供系統所需要的壓力與流量，節省不必要的能源消耗。當待機時柱塞泵吐出流量近似零，電機功率損耗輸出亦近似零，當系統壓力升高到設定值時，柱塞泵的流量會自動減少，只補充系統所需流量，而壓力是維持不變的，故大幅減低油温上升，節省不必要的能源浪費。 2.液電泵與一般葉片或齒輪泵+PQ閥所配合的油路相互比較，約可以節省電力30%-50%能源。油箱液壓油容量亦可較小，省電又環保的最佳設計。 1.HK type supplies the system pressure and flow depending on the proportional pressure and flow, voltage,and load value to save the energy.When in waiting circle,the outlet displacement and horse power loss are close to zero.When pressure reaches to preset value,theflow decrease to the min.,and the pressure is constant to reach low oil heat generation and energy loss. 2.HK type can save 30%~50% energy compare to vane pump and gear pump+PQ valve.It is an energy-saving and environmental design.
HQ型式： 負載感應控制+比例流量控制 Load-sensing Proportional Flow control	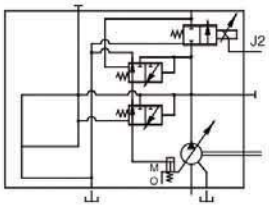	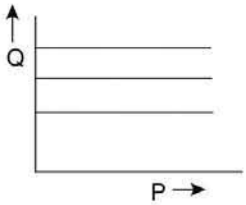	1.此爲HL型式泵浦所具備之特性外，再增加比例流量控制。 2.同比例流量閥控制，藉電信輸入以調節泵浦排量。及電控模組之控制提供所需流量。 1.Same as Type "HL" and proportional flow function added. 2.The proportional flow control allows the adjustment of the pumps output flow with an electrical input signal. Supplied and adjusted the displacement by the electronic control module.

Copyright@2013-YEOSHE-ALL RIGHTS RESERVED.

內部構造圖:

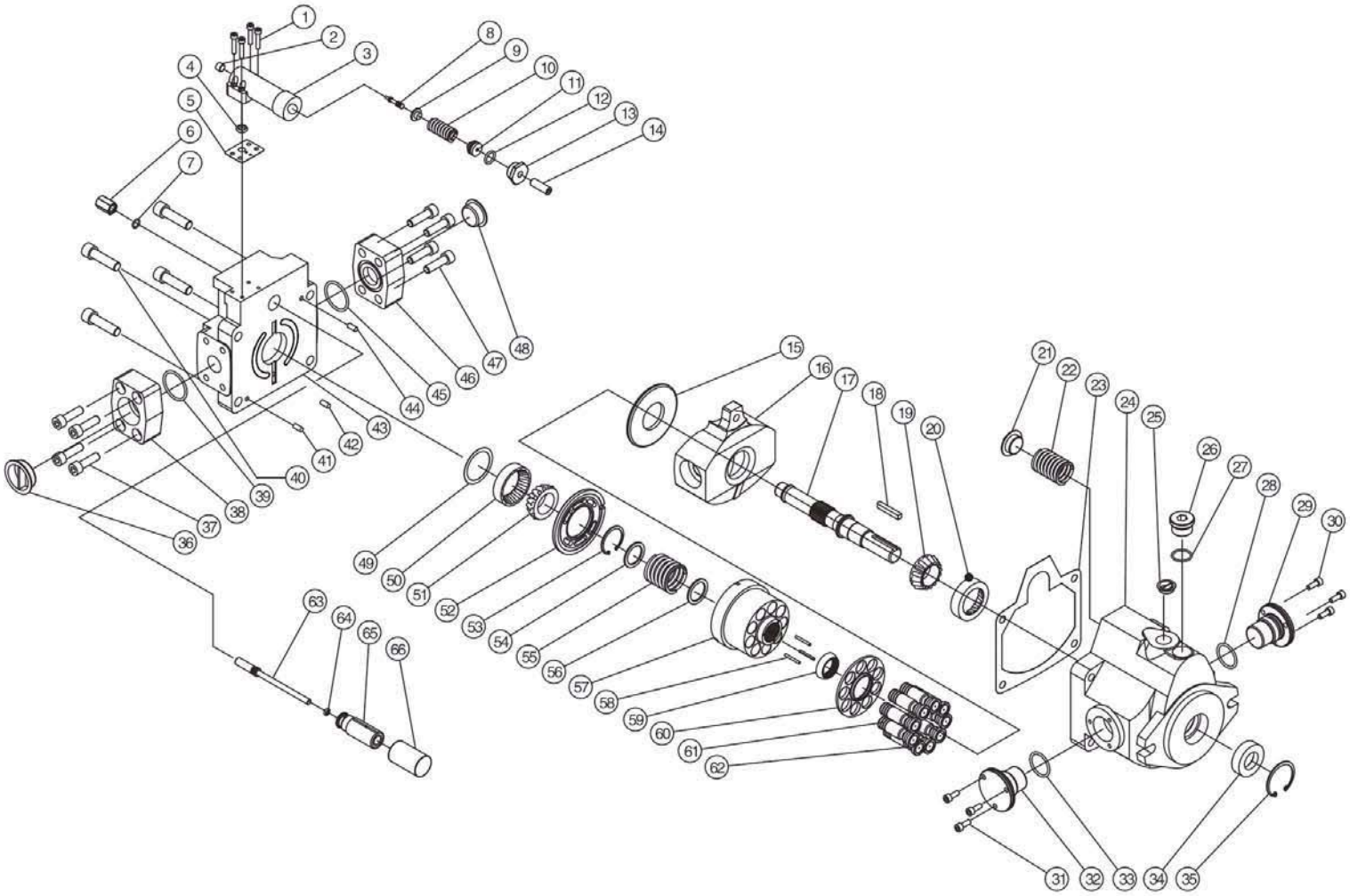

件號No.	品名DescriptionIm	件號No.	品名DescriptionIm	件號No.	品名DescriptionIm
1	內六角螺絲Bolt	23	面蓋牛皮紙End cover seal	45	O型環O-ring
2	孔塞Prot plug	24	泵浦體Pump body	46	法蘭Flange
3	調壓閥Pressure compensator	25	塑膠塞頭Drain plug	47	內六角螺絲Bolt
4	O型環O-ring	26	注油口螺絲Filling screw	48	塑膠孔塞Plug
5	調壓閥牛皮紙Gasket	27	O型環O-ring	49	薄鋼片Washer cylinder block
6	電鍍螺帽Lock nut	28	O型環O-ring	50	軸承Bearing of pump cover
7	O型環O-ring	29	曲柄軸心Swash shaft	51	軸承Bearing of pump cover
8	調壓閥軸心Control compensator shaft	30	內六角螺絲Bolt	52	銅片Valve plate
9	調壓閥前頂頭Spring washer	31	內六角螺絲Bolt	53	扣環Snap ring
10	調壓閥彈簧Control spring	32	曲柄軸心Swash shaft	54	九孔座上下鋼片Washer cylinder block
11	調壓閥油封座O-ring washer	33	O型環O-ring	55	九孔彈簧Retainer spring
12	O型環O-ring	34	油封Shaft seal	56	九孔座上下鋼片Washer cylinder block
13	調壓閥螺帽Lock nut	35	M扣環M snap ring	57	九孔座Cylinder block
14	無頭螺絲Screw	36	塑膠孔塞Plug	58	九孔鋼針Roller
15	曲柄鋼片Slipper plate	37	內六角螺絲Bolt	59	半圓球Cylinder block holder
16	曲柄Swash	38	法蘭Flange	60	九孔片Slipper retainer
17	泵浦軸心Shaft	39	O型環O-ring	61	活塞Pistons
18	單頭圓鍵Shaft Key	40	內六角螺絲Bolt	62	銅頭Pistons
19	軸承Bearing of shaft	41	面蓋鋼針Roller	63	流量螺絲Flow screw
20	軸承Bearing of shaft	42	面蓋鋼針Roller	64	O型環O-ring
21	曲柄球頂座Servo spring washer	43	泵浦蓋End cover	65	流量固定軸Sleeve piston
22	曲柄彈簧Servo spring	44	面蓋鋼針Roller	66	流量活動軸Servo piston sleeve

Copyright@2013-YEOSHE-ALL RIGHTS RESERVED.

V38、V42系列

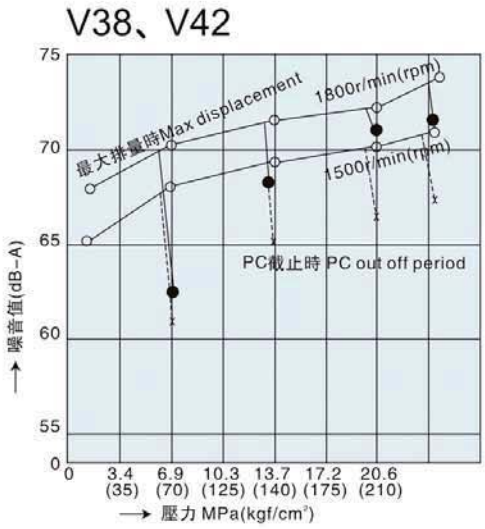

性能特性

＊軸轉速：1,800r/min
＊使用油：ISO VG32
＊油　溫：50℃

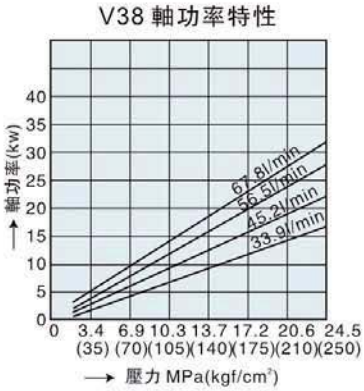

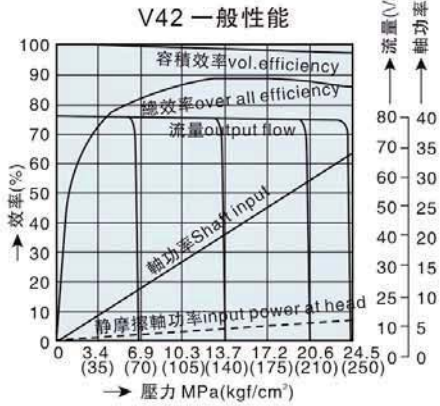

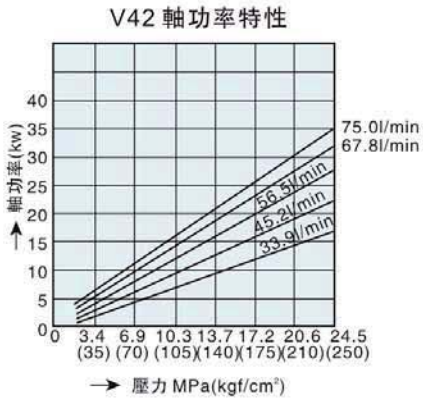

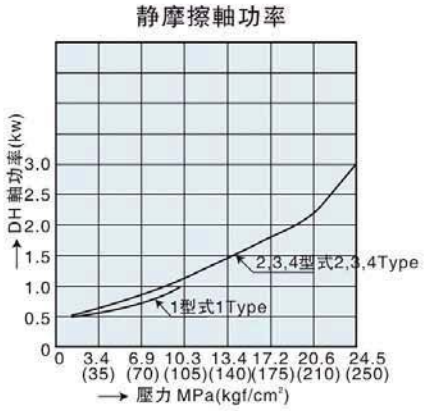

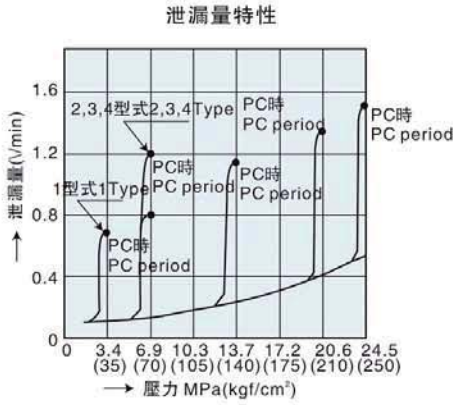

Copyright@2013-YEOSHE-ALL RIGHTS RESERVED.

V38A, V42A Pressure Compensator.
壓力補償控制

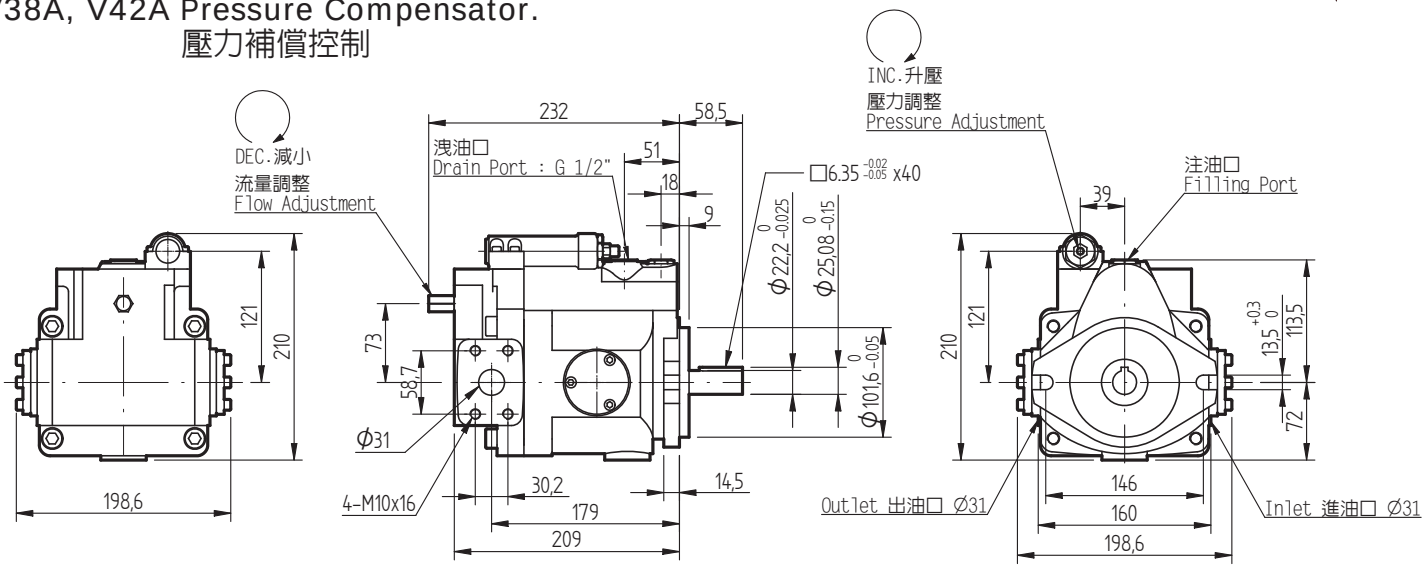

V38B, V42B Multi-stage Flow & Single-stage Pressure Compensator Control (With Cylinder).
無段變速，靠外接油壓缸，流量可任意變化控制

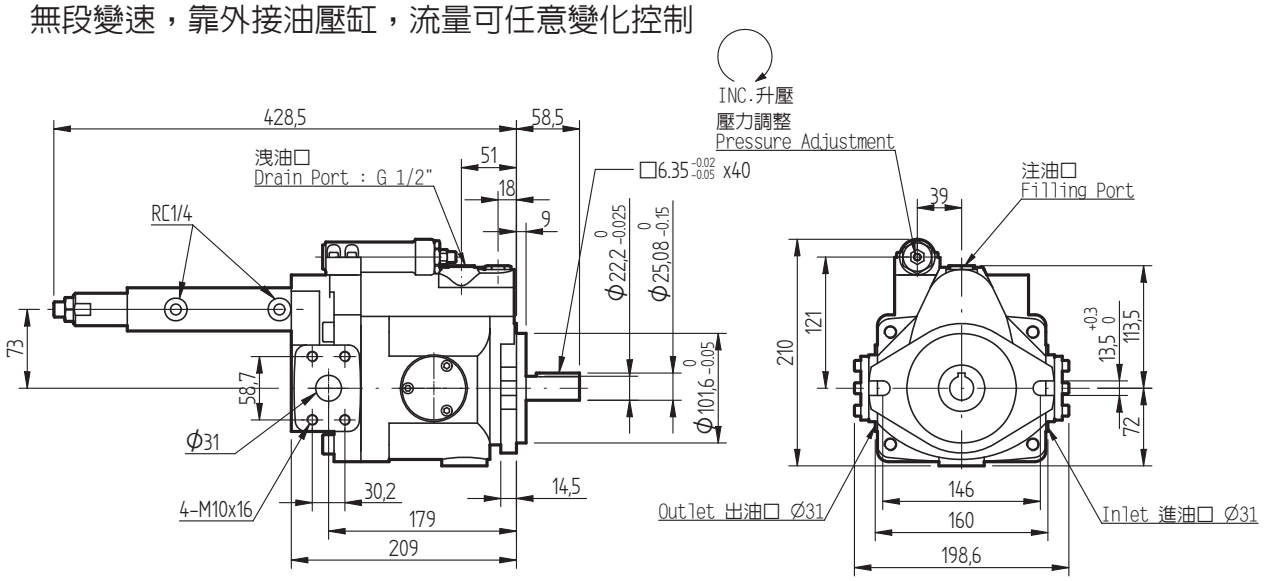

V38C, V42C 2-stage Pressure & Flow Control Type
兩段壓力，兩流量控制(自壓式)

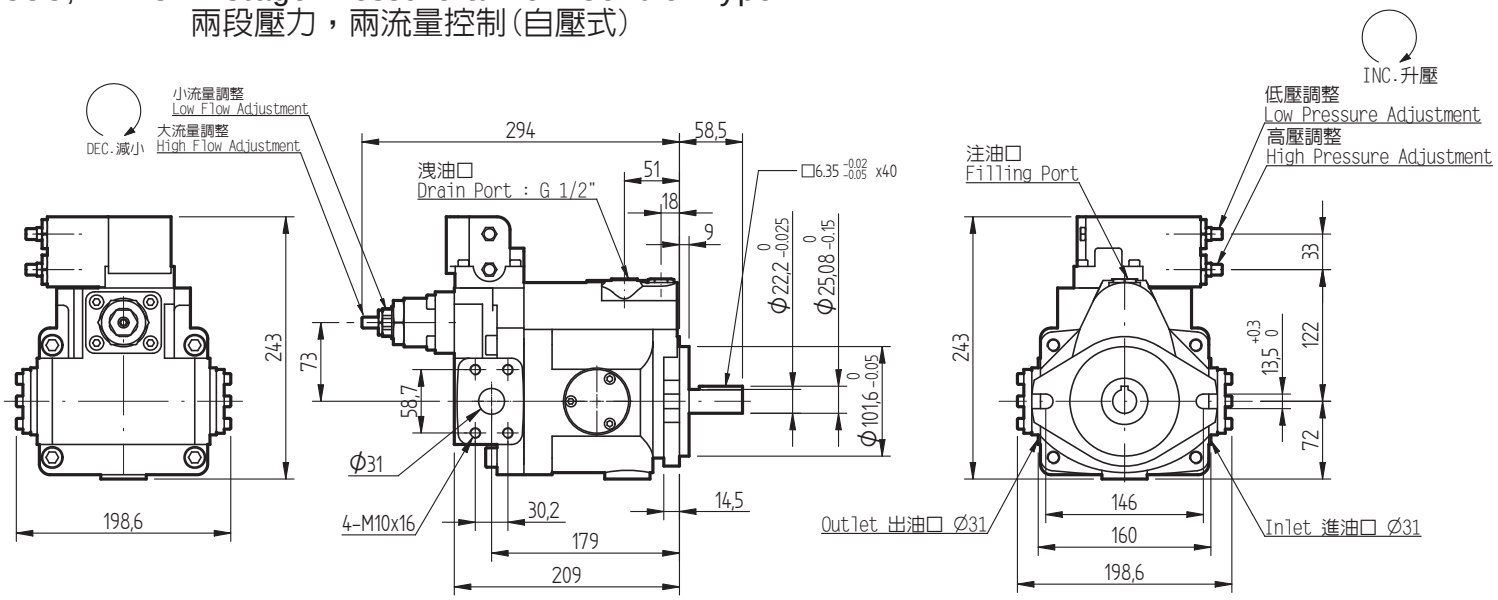

Copyright@2013-YEOSHE-ALL RIGHTS RESERVED.

V38CG, V42CG 2-stage Pressure & Flow Control Type with Remote
遙控兩段壓力，兩流量控制(自壓式)

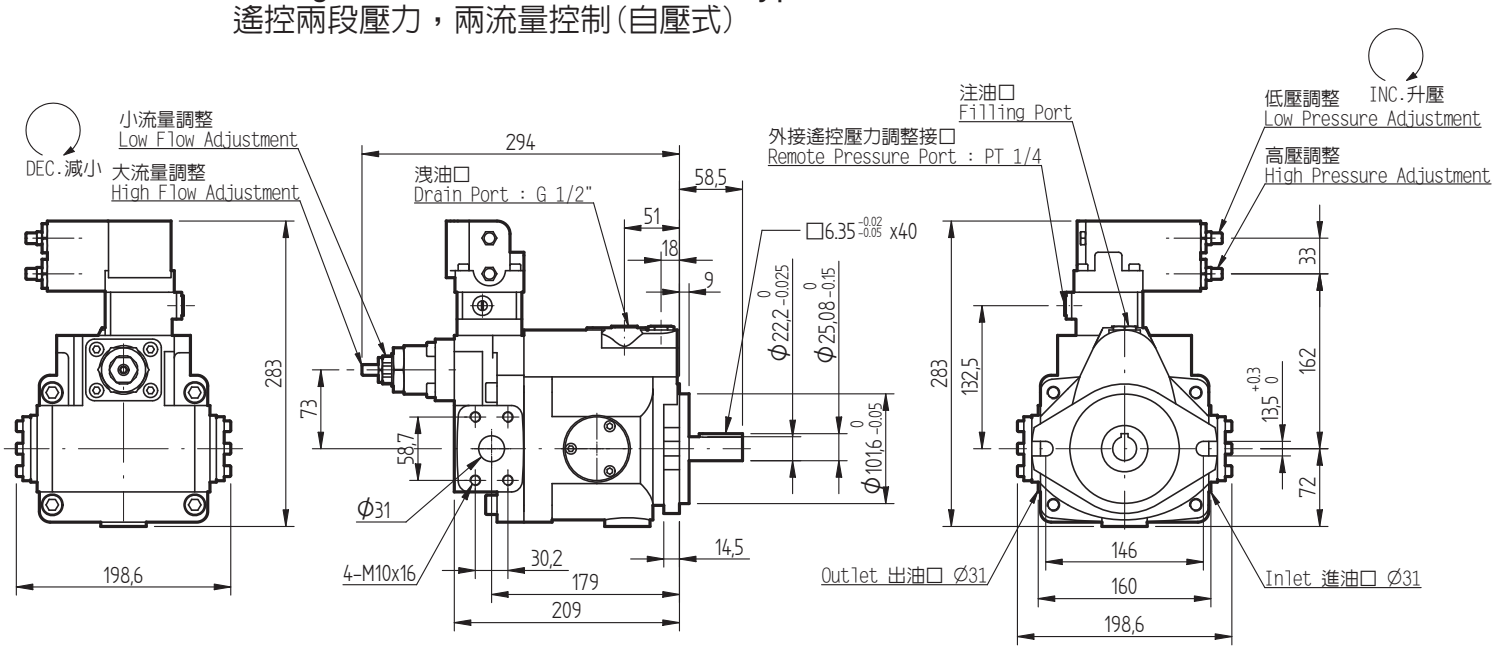

V38D, V42D Solenoid Controlled Pressure Compensating Type With Unloading Device
低壓卸載，壓力補償控制

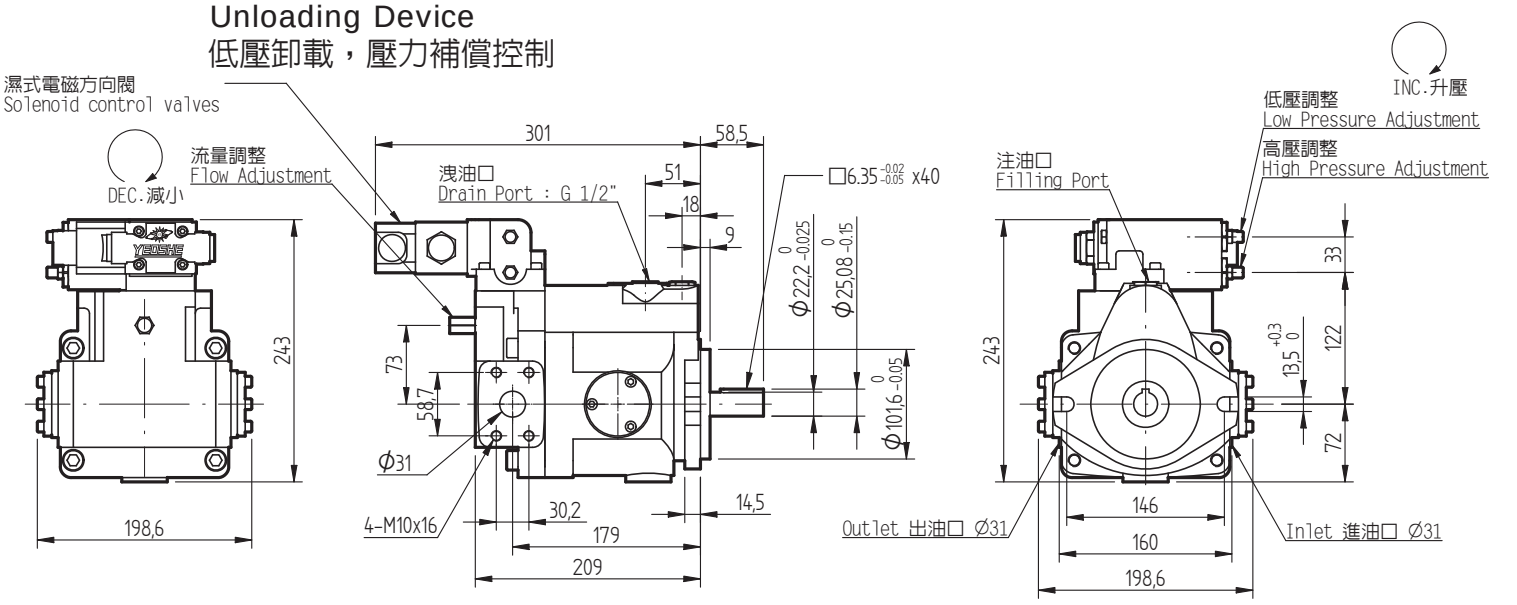

V38DG, V42DG Solenoid Controlled Pressure Compensating Type With Unloading Device & Remote
遙控低壓卸載，壓力補償控制

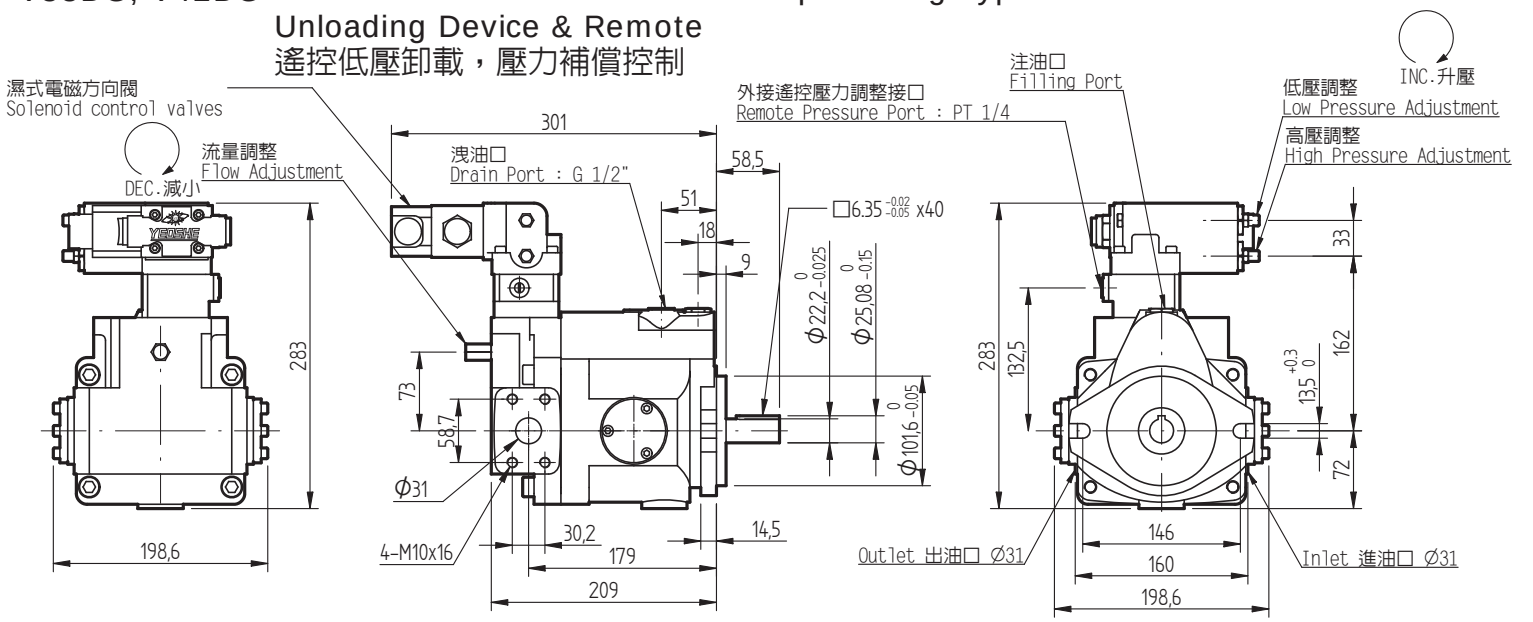

Copyright@2013-YEOSHE-ALL RIGHTS RESERVED.

V38E, V42E Dual Pressure Control
電控兩段壓力補償控制

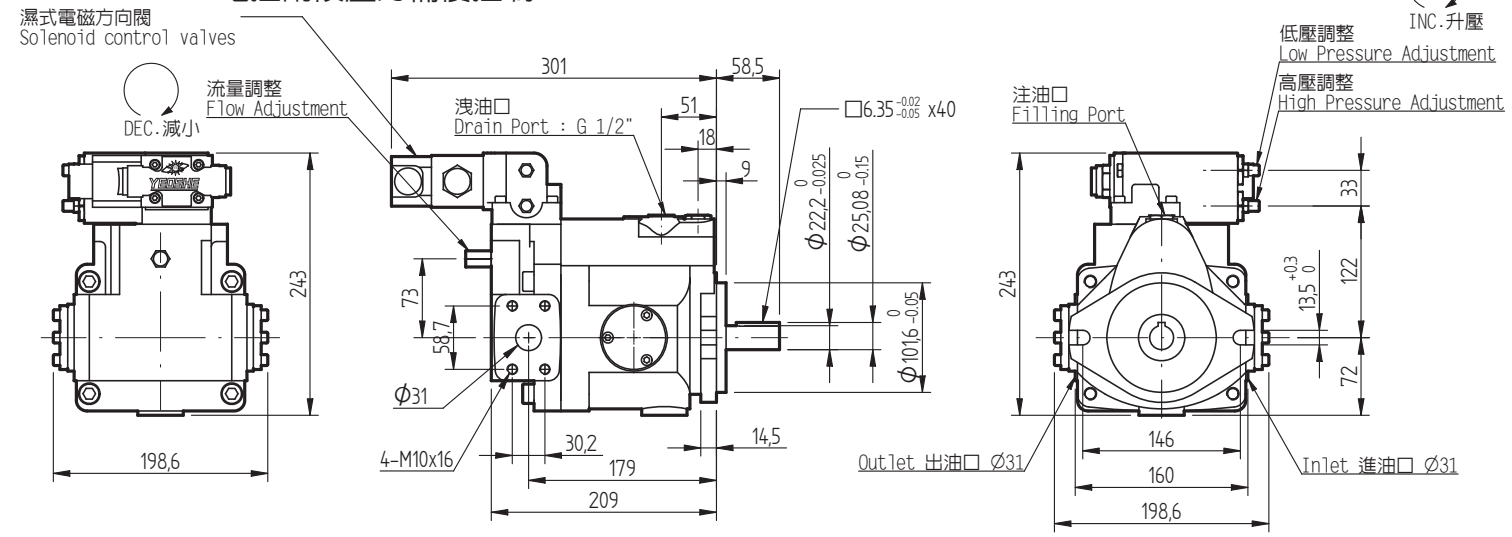

V38EG, V42EG Dual & Remote Pressure Control
電控遙控兩段壓力補償控制

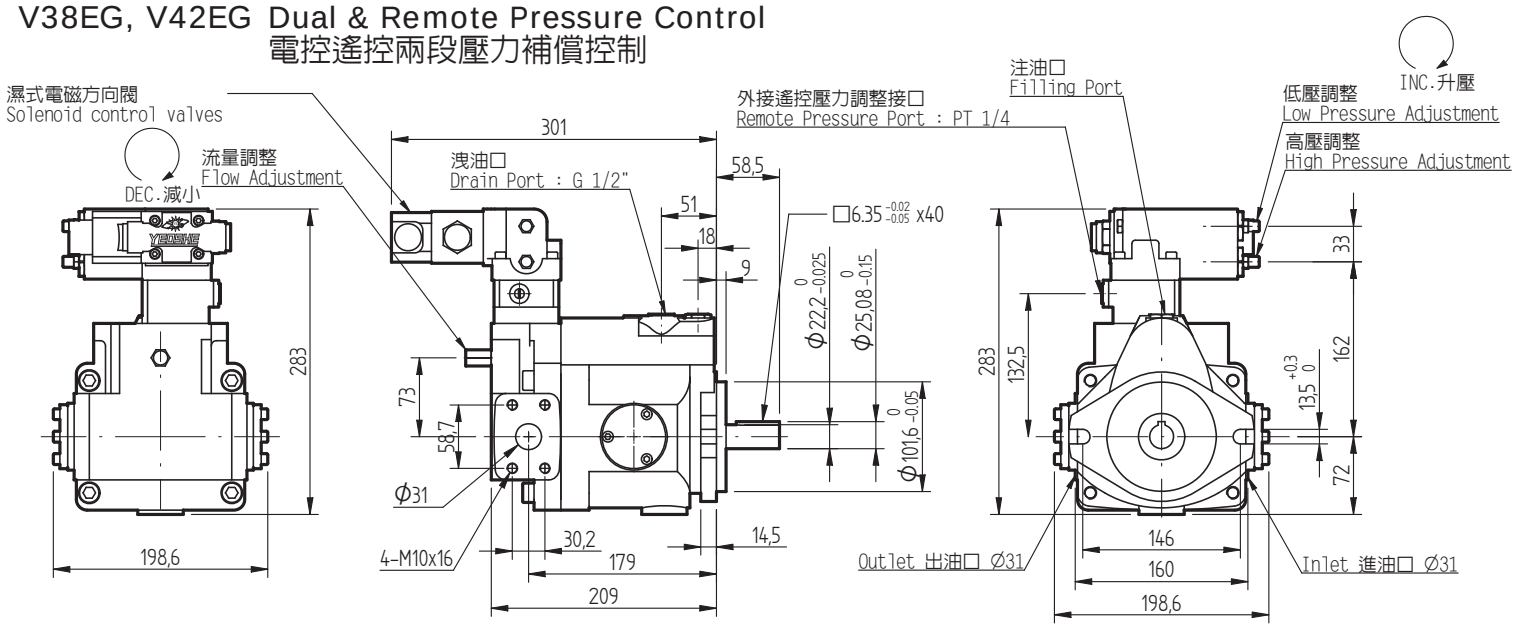

V38F, V42F 2 Flow-2 Pressure Control by Solenoid Operated Valve
電控兩段壓力，兩段流量控制

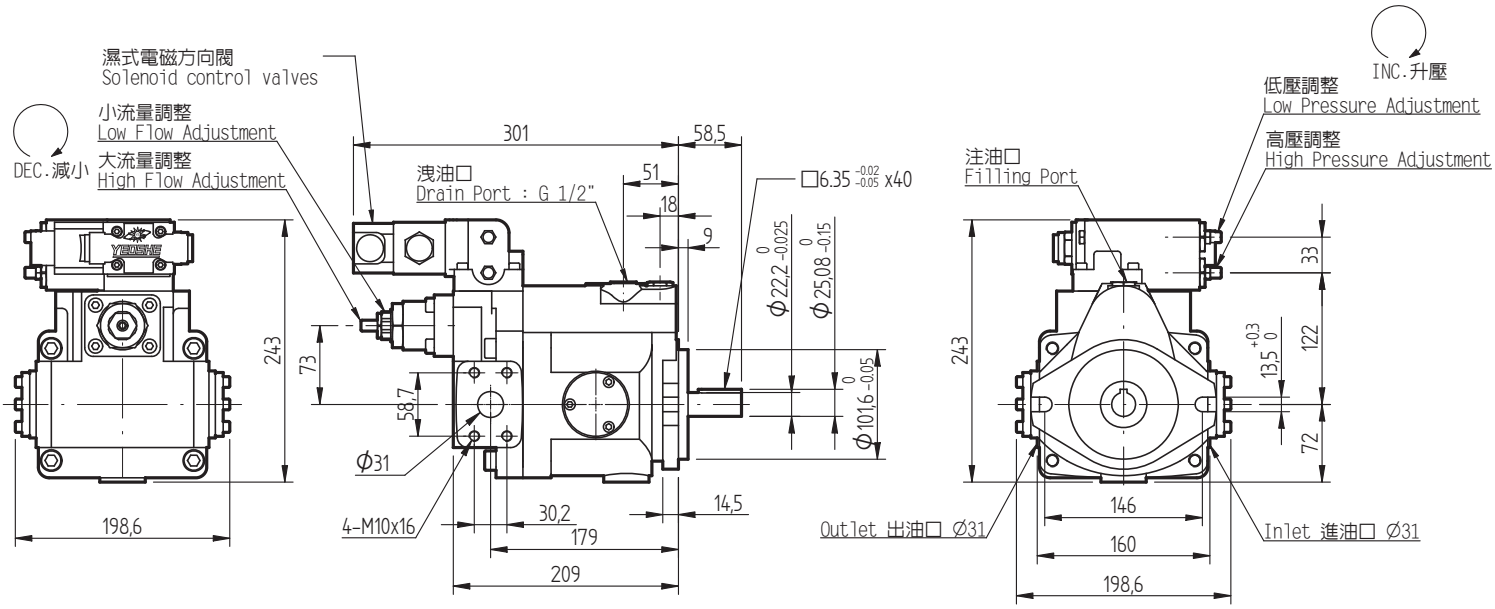

Copyright@2013-YEOSHE-ALL RIGHTS RESERVED.

V38FG, V42FG 2 Flow-2 Pressure Control by Solenoid Operated & Remote Valve
電控遙控兩段壓力，兩段流量控制

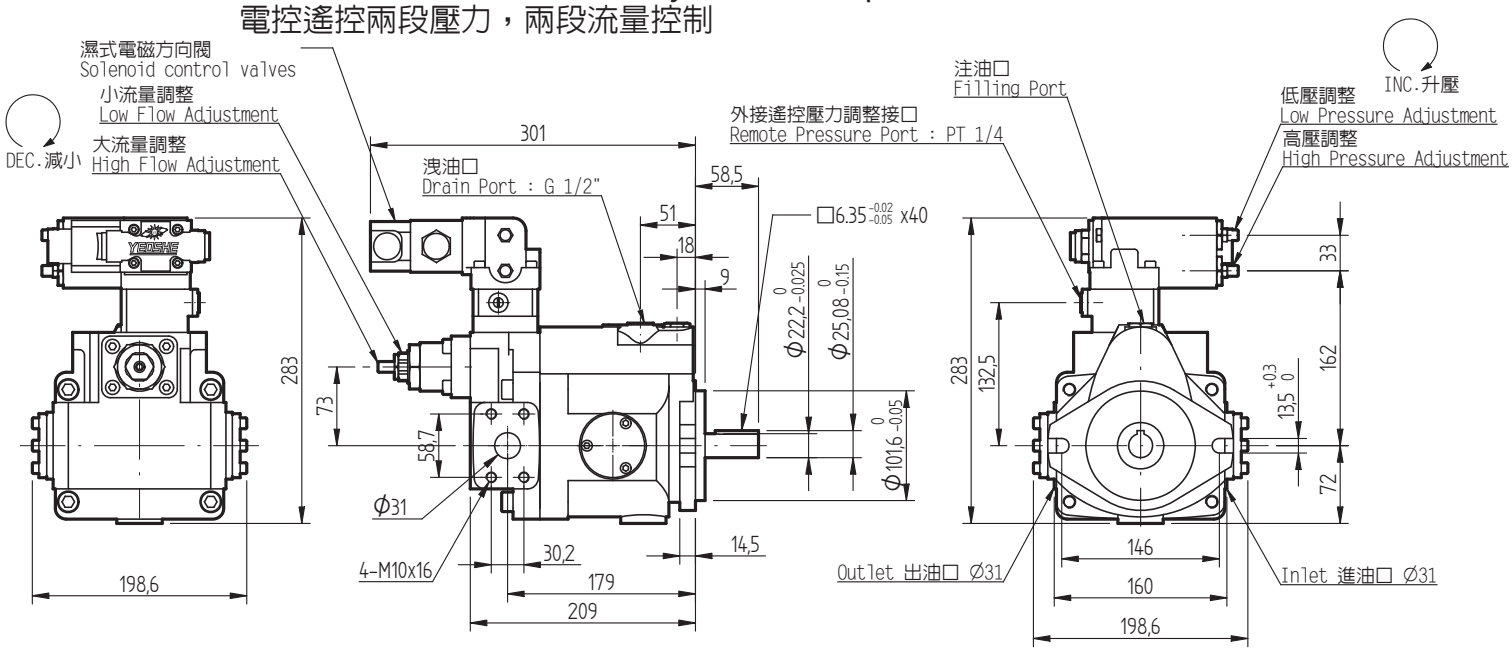

V38G, V42G Remoted Pressure Compensator Control
遠程遙控壓力補償控制

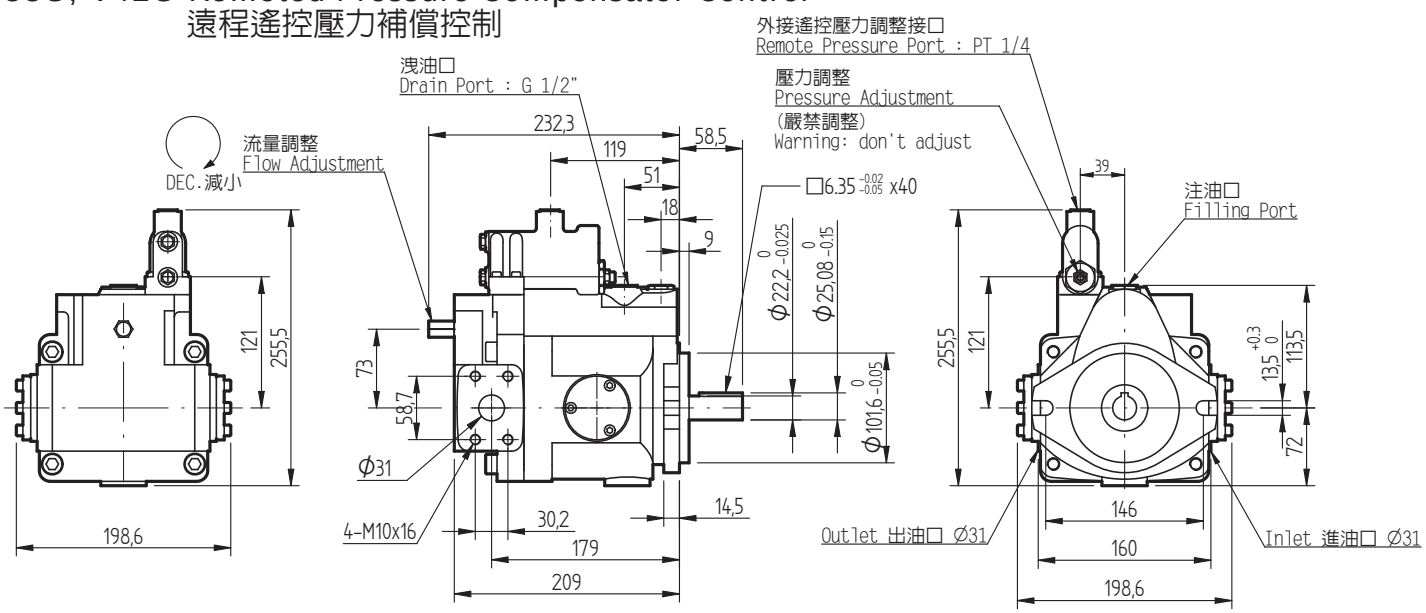

V38GJ, V42GJ Proportional Pressure with interface
層式比例壓力控制

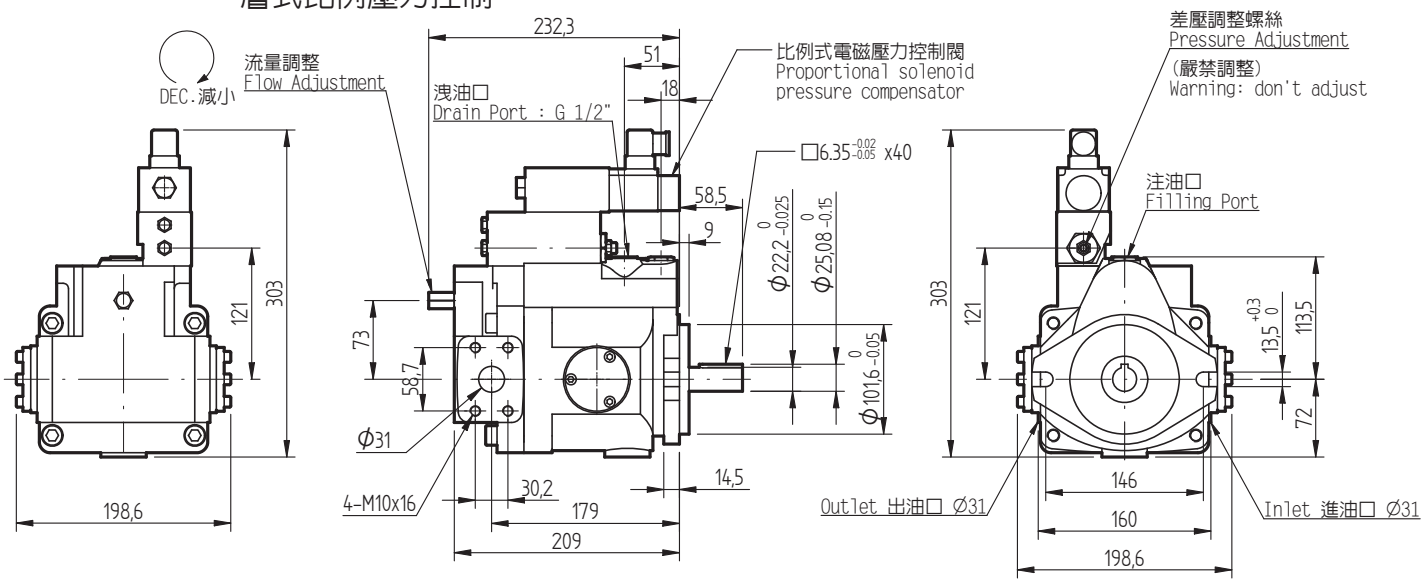

Copyright@2013-YEOSHE-ALL RIGHTS RESERVED.

V38GM, V42GM Remote Interface (Not include valve)
層式遙控控制(不含調壓閥)

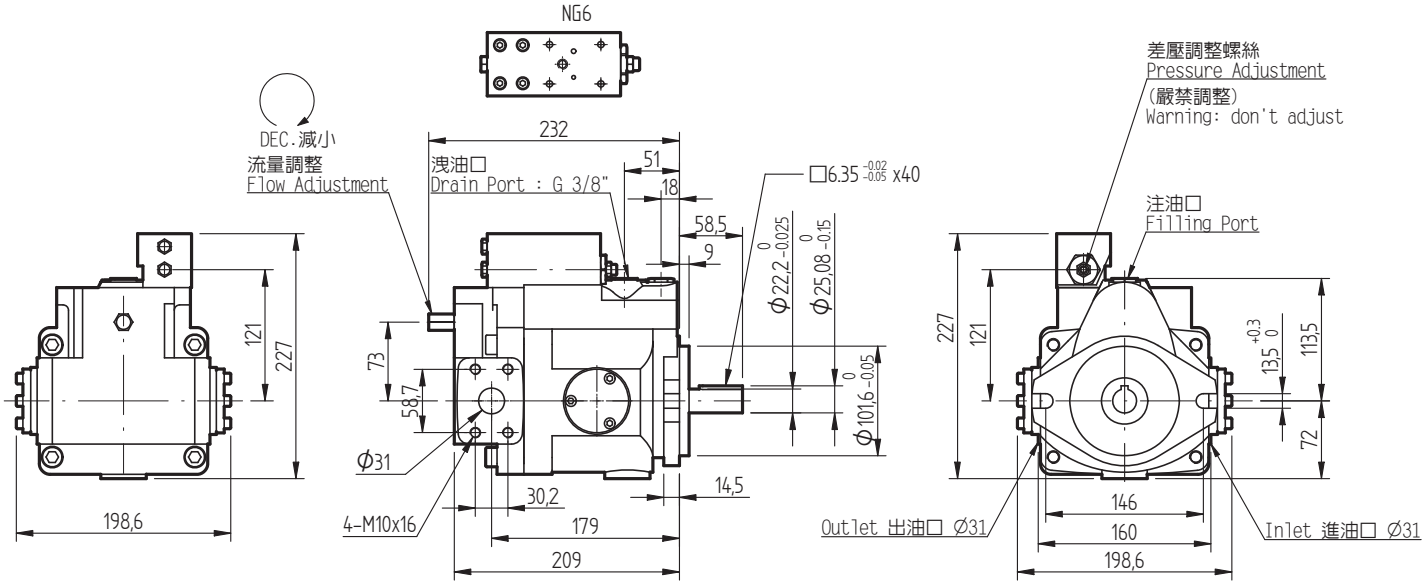

V38HL, V42HL Load-sensing Compensator
負載感應控制

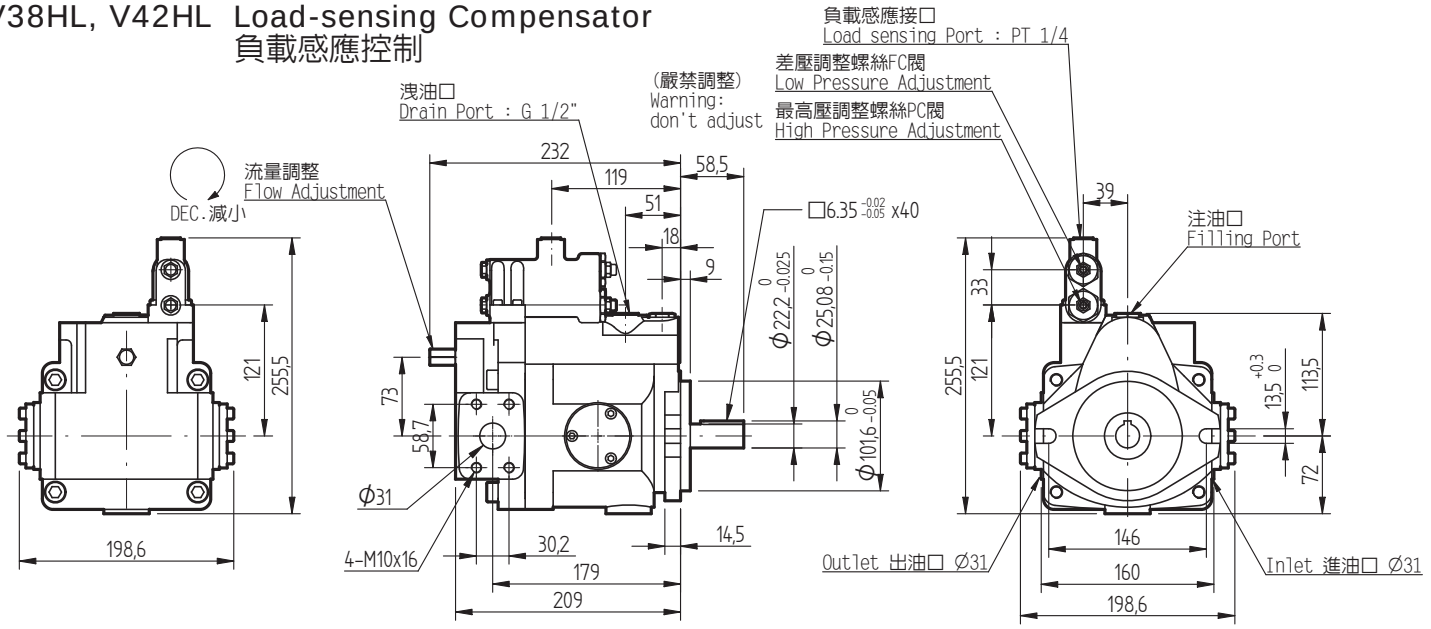

V38HK, V42HK Proportional Electro-hydraulic Load sensing Type
負載感應+比例壓力比例流量控制

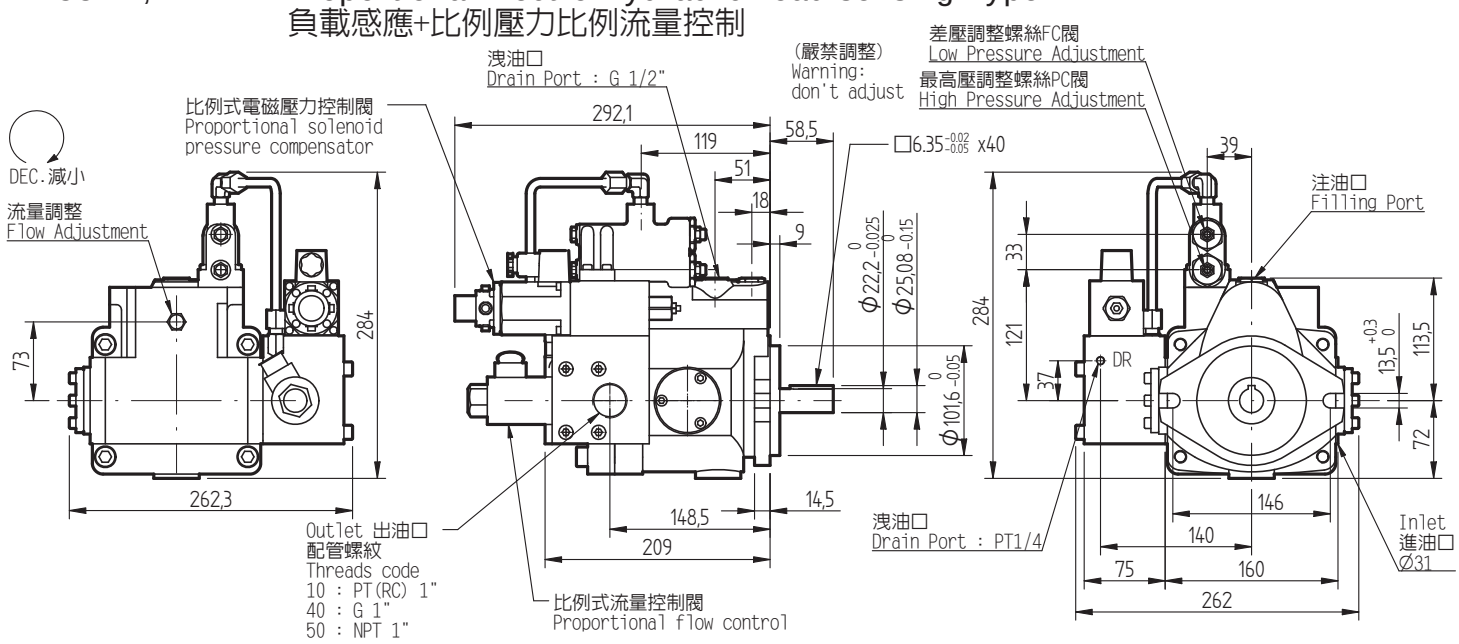

Copyright@2013-YEOSHE-ALL RIGHTS RESERVED.

V38HQ, V42HQ Load-sensing Proportional Flow Controle
負載感應控制+比例流量控制

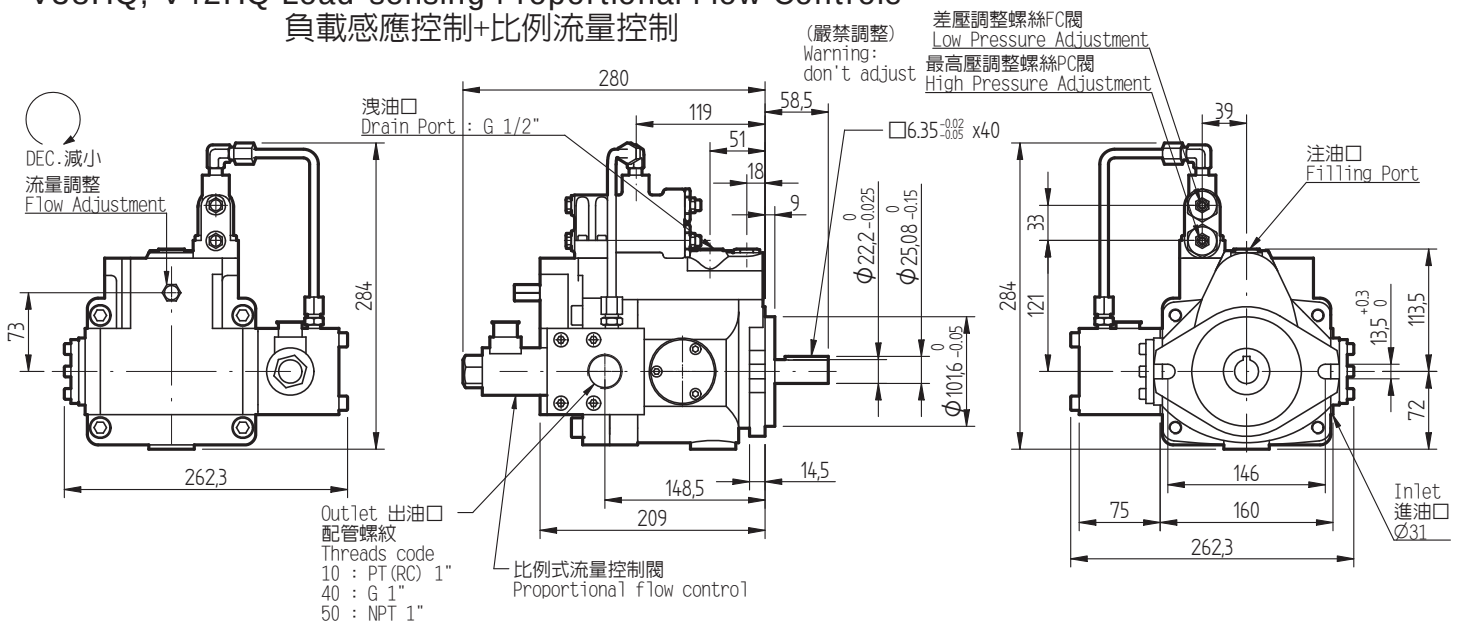

V38, V42 Preparded for thru drive (SAE A Ø82.55)
為通軸準備泵浦 (SAE A Ø82.55，需特別註明通軸代碼加 D)

V 38 □□□□□ — □□ D □□

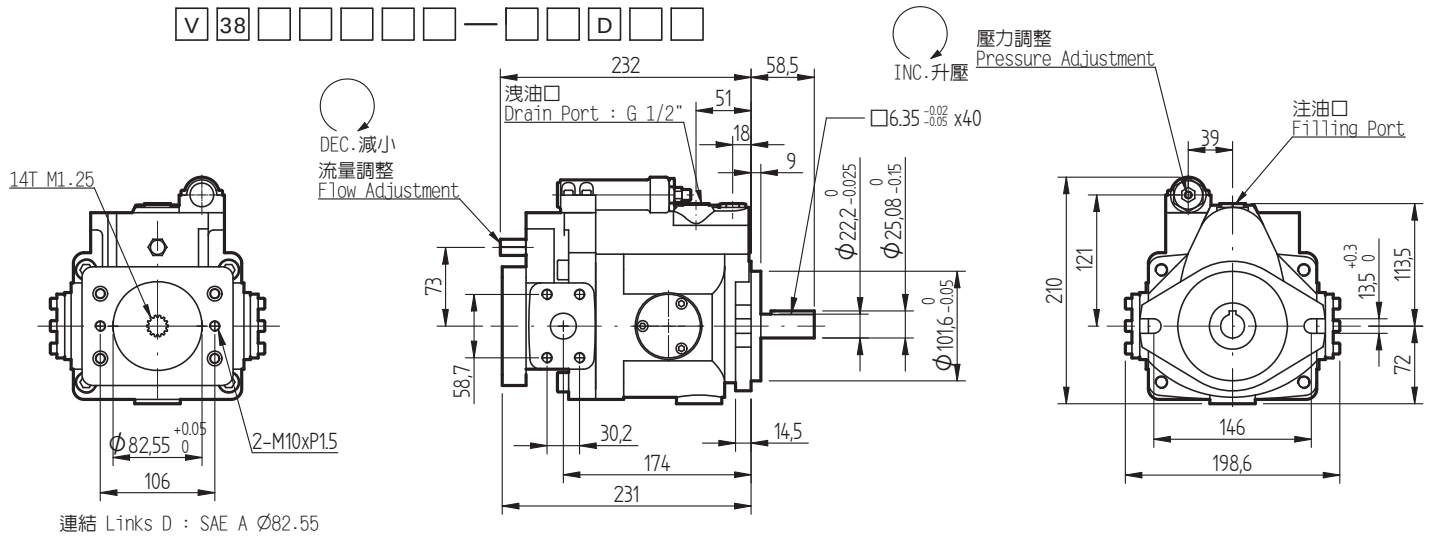

連結 Links D : SAE A Ø82.55

V38, V42 Preparded for thru drive (SAE B Ø101.6)
為通軸準備泵浦 (SAE B Ø101.6，需特別註明通軸代碼加 E)

V 38 □□□□□ — □□ E □□

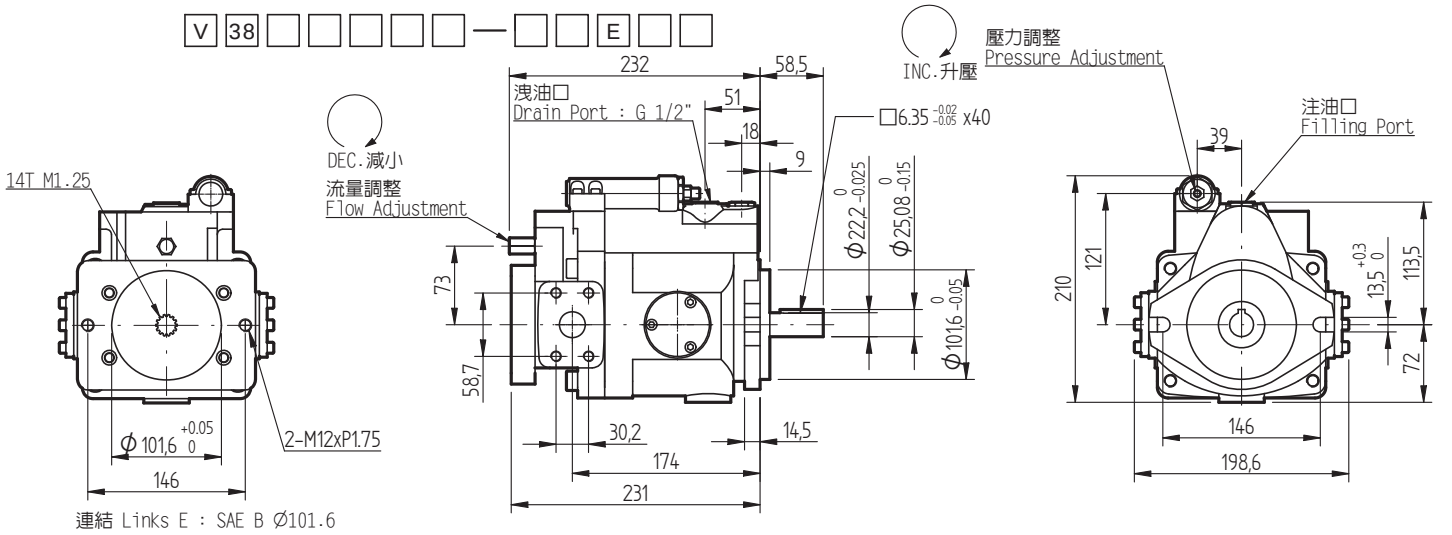

連結 Links E : SAE B Ø101.6

型式 Type	A	B	C	CG	D	DG	E	EG	F	FG	G	GJ	GM	HL	HK	HQ
	○				○	○	○	○			○	○	○	○	○	○

為通軸準備可選用的控制型式 Thru Drive Option

Copyright@2013-YEOSHE-ALL RIGHTS RESERVED.

V38, V42 Axial Port
後方出油(需特別註明配管方向代碼加B)

V 38 □□□ B □ — □□□□□

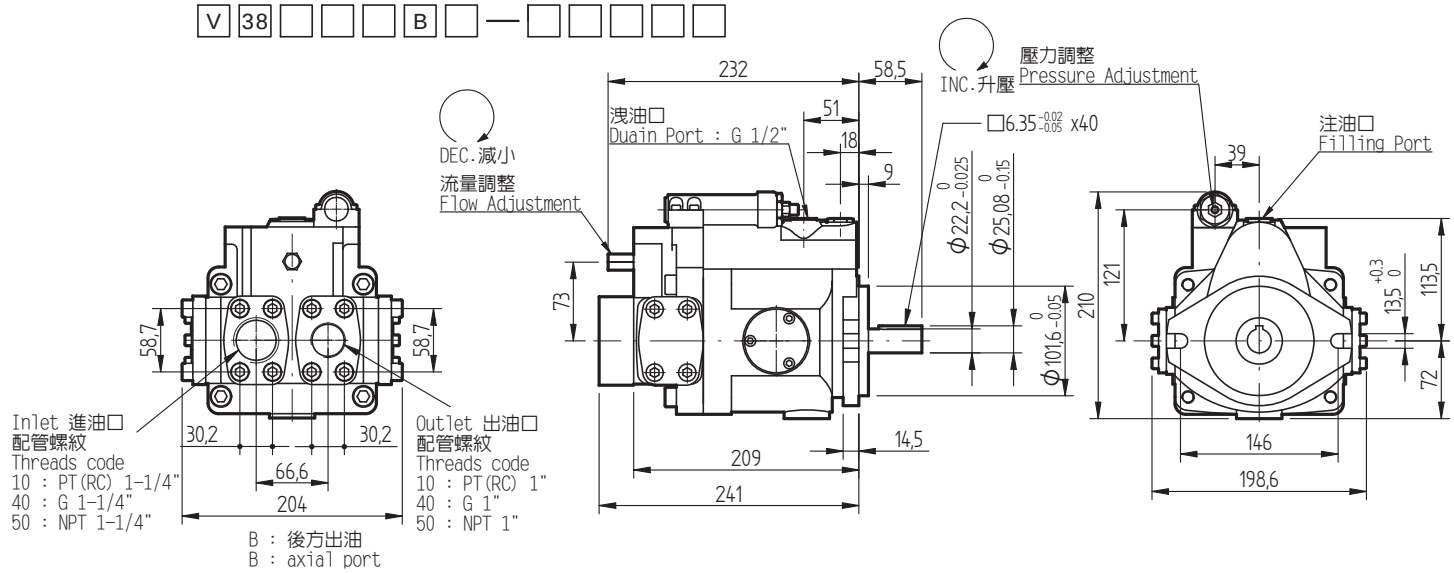

V38, V42 4 connections for axial port
兩側出油加後方出油(需特別註明配管方向代碼加B2)

V 38 □□□ B2 □ — □□□□□

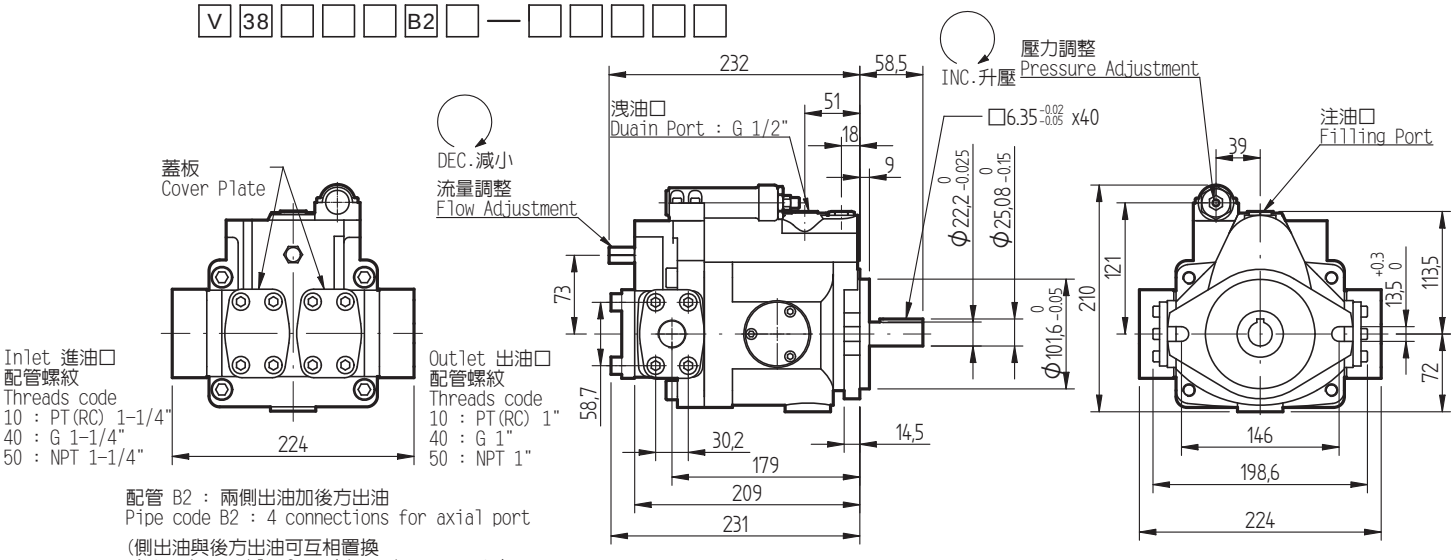

型式 Type	A	B	C	CG	D	DG	E	EG	F	FG	G	GJ	GM	HL	HK	HQ
	○	○	○	○					○	○	○	○	○	○		

後方出油可選用的控制型式 Axial Port Option

V38, V42 Splined Shaft Type
梅花軸心型式

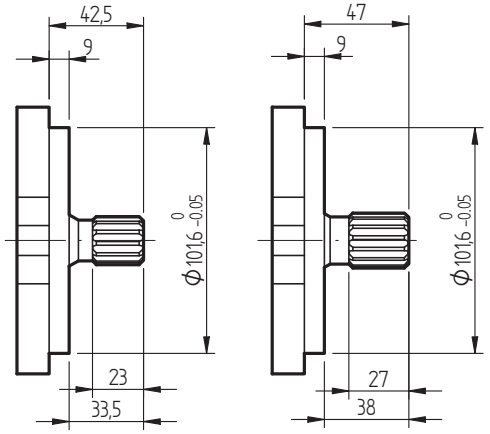

S: 13T DP16/32

S1: 15T DP16/32

V38, V42 Hydraulic Flange
進出油法蘭

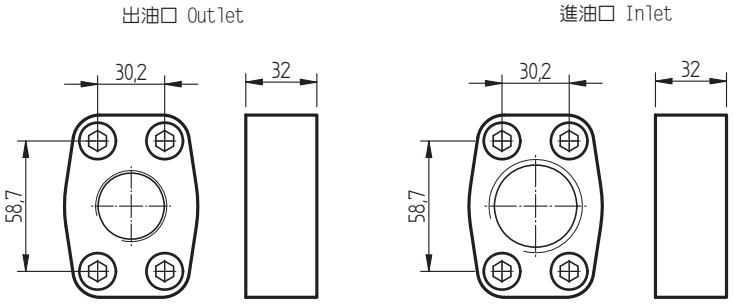

Outlet 出油口
配管螺紋
Threads code
10 : PT(RC) 1"
40 : BSPP(G) 1"
50 : NPT 1"

Inlet 進油口
配管螺紋
Threads code
10 : PT(RC) 1-1/4"
40 : BSPP(G) 1-1/4"
50 : NPT 1-1/4"

Copyright@2013-YEOSHE-ALL RIGHTS RESERVED.

柱塞雙聯泵浦(可與其他形式泵浦連接成雙聯泵浦)
Tandem Pump(Multi-option for tandem pump)

Pump 1	V15 (V18)	V23 (V25)	V23 (V25)	V38 (V42)	V38 (V42)	V38 (V42)	V50 (V70)	V50 (V70)	V50 (V70)
Pump 2	V15 (V18)	V15 (V18)	V23 (V25)	V15 (V18)	V23 (V25)	V38 (V42)	V15 (V18)	V23 (V25)	V38 (V42)
A	G 3/8”	G 3/8”	G 3/8”	G 3/8”	G 3/8”	G 1/2”	G 3/8”	G 3/8”	G 1/2”
B	G 3/8”	G 3/8”	G 3/8”	G 1/2”	G 1/2”	G 1/2”	G 3/4”	G 3/4”	G 3/4”
C	57.45	57.45	61	57.45	61	73	57.45	61	73
D	35.1	35.1	52.4	35.1	52.4	58.7	35.1	52.4	58.7
E	35.1	35.1	26.2	35.1	26.2	30.2	35.1	26.2	30.2
F	35.1	52.4	52.4	58.7	58.7	58.7	69.9	69.9	69.9
G	35.1	26.2	26.2	30.2	30.2	30.2	35.7	35.7	35.7
H	M8x20	M8x20	M10x16	M8x20	M10x16	M10x16	M8x20	M10x16	M10x16
I	M8x20	M10x16	M10x16	M10x16	M10x16	M10x16	M12x25	M12x25	M12x25
J	147	147	170	147	170	179	147	170	179
K	147	170	170	179	179	179	256.5	256.5	256.5
L	332	369	402	378	401	410	464	493	502
M	382	419	455	428	454	465	515	546	555
N	48	48	51	48	51	51	48	51	51
O	48	51	51	51	51	51	73	73	73
P	6	9	9	9	9	9	10	10	10
Q	4.76x32	6.35x40	6.35x40	6.35x40	6.35x40	6.35x40	7.94x45	7.94x45	7.94x45
R	13	14	14	14.5	14.5	14.5	24	24	24
S	Ø19.05	Ø22.22	Ø22.22	Ø22.22	Ø22.22	Ø22.22	Ø31.75	Ø31.75	Ø31.75
T	21.15	25.08	25.08	25.08	25.08	25.08	35.35	35.35	35.35
U	Ø82.55	Ø101.6	Ø101.6	Ø101.6	Ø101.6	Ø101.6	Ø127	Ø127	Ø127
V	Ø25	Ø25	Ø25	Ø31	Ø31	Ø31	Ø38	Ø38	Ø38
W	Ø25	Ø25	Ø25	Ø31	Ø31	Ø31	Ø38	Ø38	Ø38
X	106	146	146	146	146	146	181	181	181
Y	131	146	146	160	160	160	208	208	208
Z	165	182	182	198.6	198.6	198.6	261.5	261.5	261.5
A1	44	39	39	39	39	39	74	74	74
A2	31.2	31.2	31.2	31.2	31.2	31.2	40	40	40
A3	5	5	5	5	5	5	8	8	8
A4	84	110	110	121	121	121	119	119	119
A5	11	13.5	13.5	13.5	13.5	13.5	18	18	18
A6	44.5	58.5	58.5	58.5	58.5	58.5	57	57	57
A7	160	193	193	210	210	210	233.5	233.5	233.5
A8	91.5	93	93	113.5	113.5	113.5	133.5	133.5	133.5
A9	60	68	68	72	72	72	100	100	100

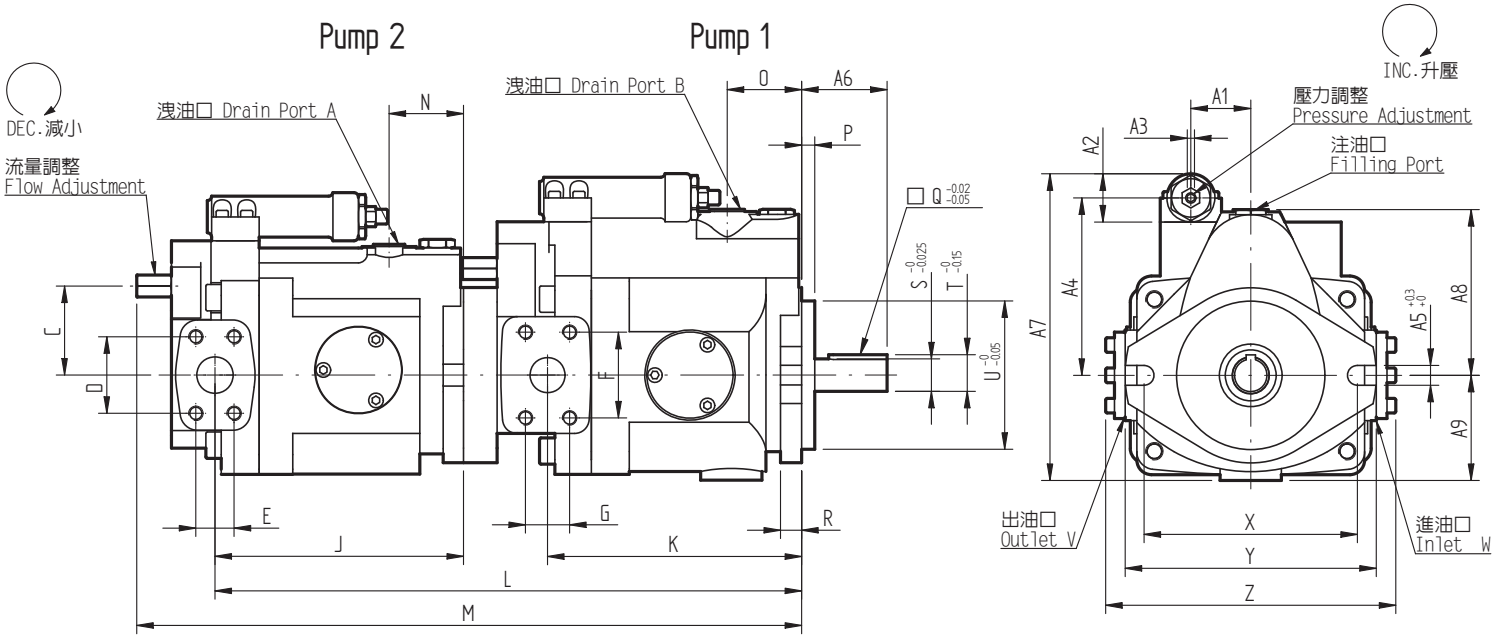

Copyright@2013-YEOSHE-ALL RIGHTS RESERVED.